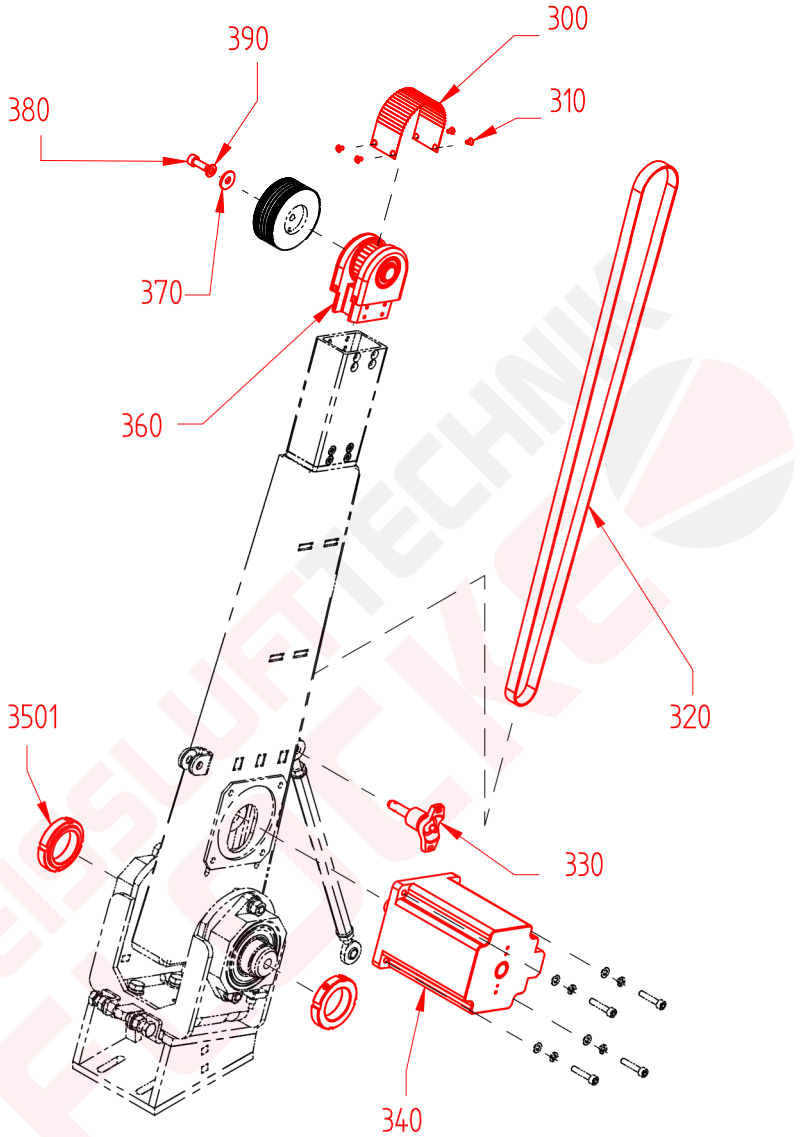

This documentand the information in itcontained are property ofLEIS TER and as such, they are to be considered reserved.
Therfore, any reproduction in any form or by any means, without priorwritten permission ofLE ISTER is forbidden.

Material: -

Volume:

Date	Drawn by
14.11.16	Fanger, Rafael
Date	Checked by
16.11.17	Strahl, Falko

Seamtek 900AT

Sheet 3 of 13

Leister Technologies AG
Switzerland

Format	Scale	Drawing number	Revision
A4	1:5	020.778	B

Model: 020778-0001.asm