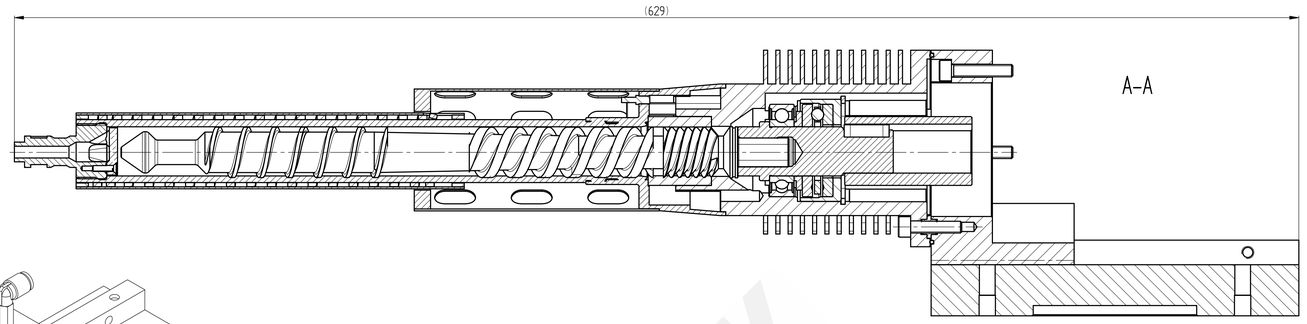

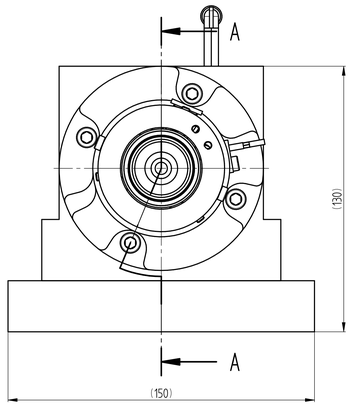

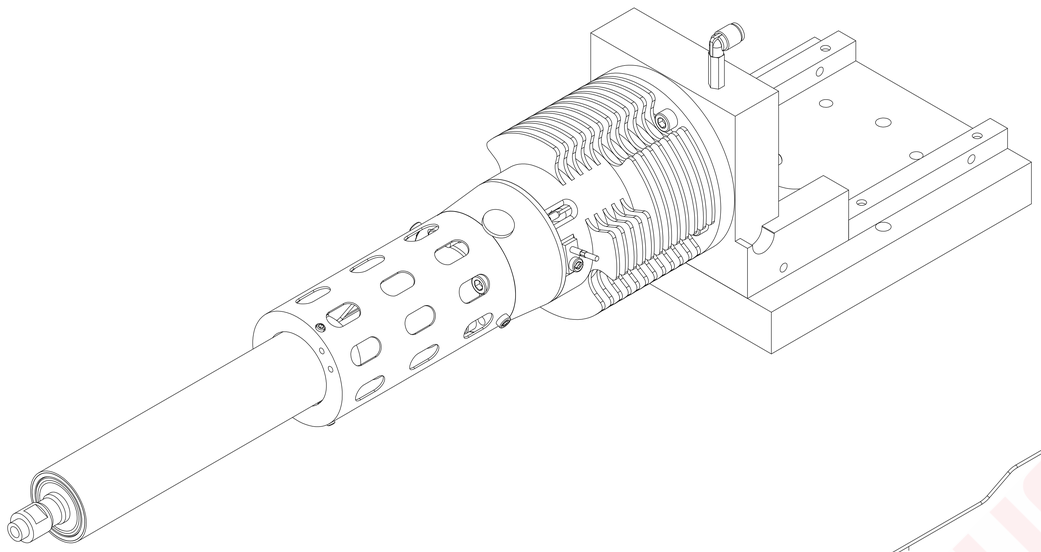

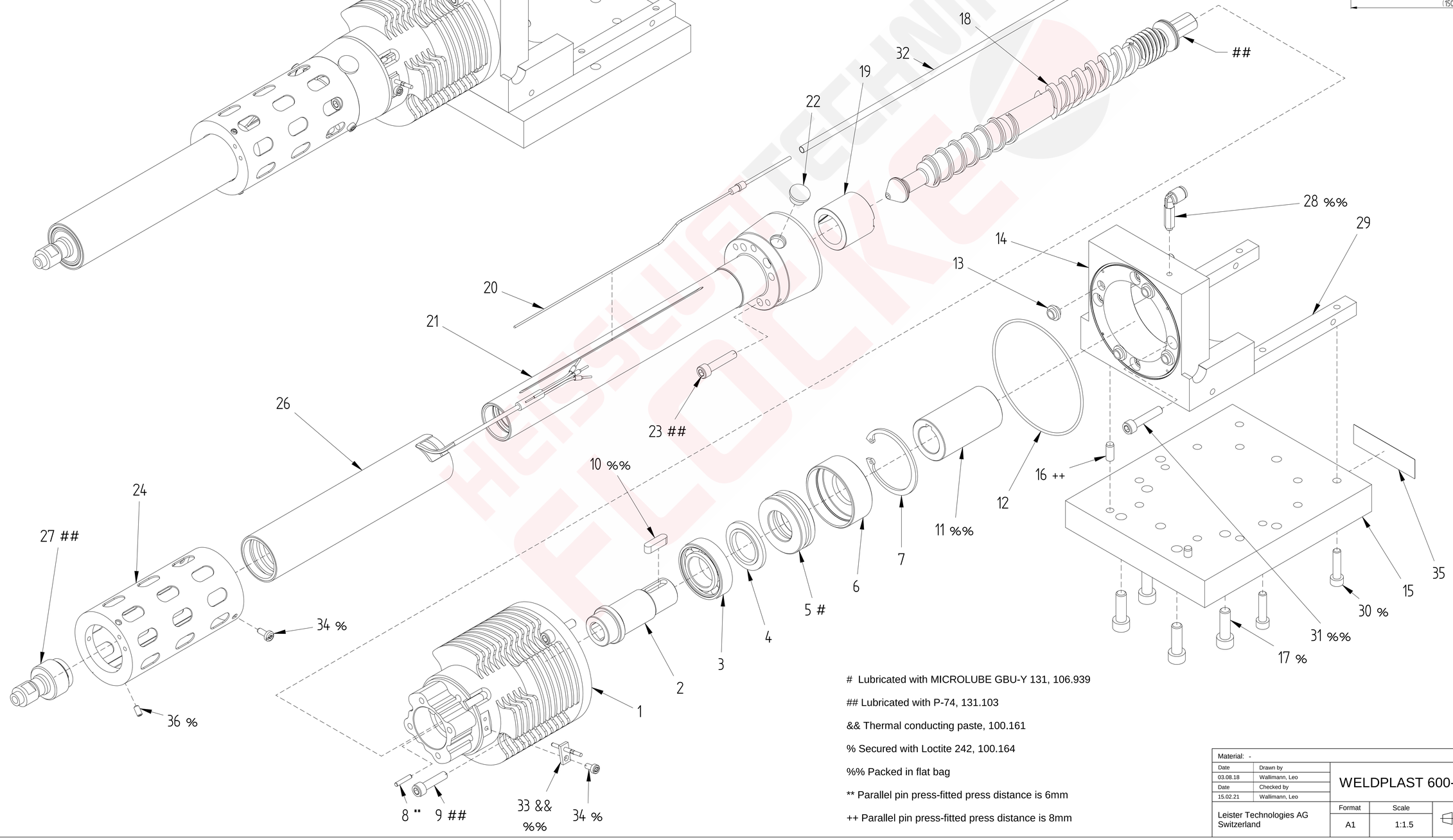

Lubricated with MICROLUBE GBU-Y 131, 106.939

Lubricated with P-74, 131.103

&& Thermal conducting paste, 100.161

% Secured with Loctite 242, 100.164

%% Packed in flat bag

** Parallel pin press-fitted press distance is 6mm

++ Parallel pin press-fitted press distance is 8mm

Material: -			Volume:
Date	Drawn by	WELDPLAST 600-i	Sheet
03.08.18	Wallimann, Leo		1
Date	Checked by		of
15.02.21	Wallimann, Leo		1
Leister Technologies AG Switzerland		Format: A1 / Scale: 1:1.5	Drawing number: 163.326 / Revision: B

Model: 163326-0001.asm

This document and the information in it contained are property of LEISTER and as such, they are to be considered reserved.
© Therefore, any reproduction in any form or by any means, without prior written permission of LEISTER is forbidden.